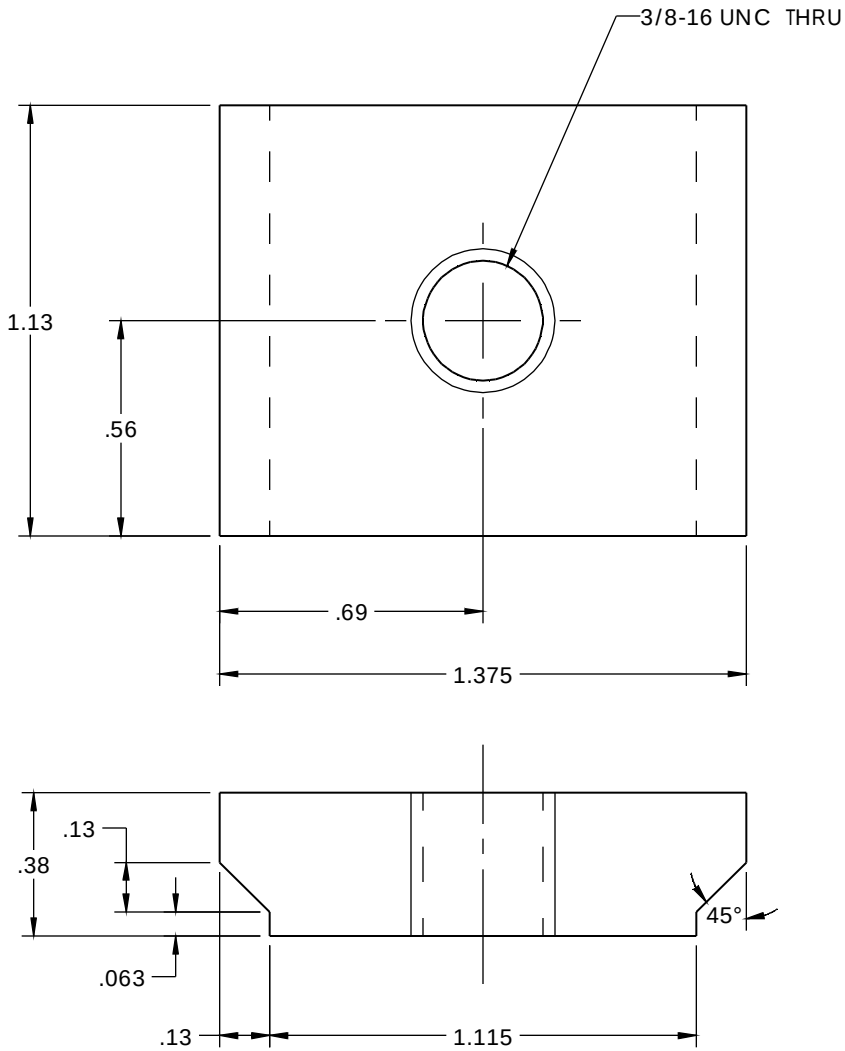

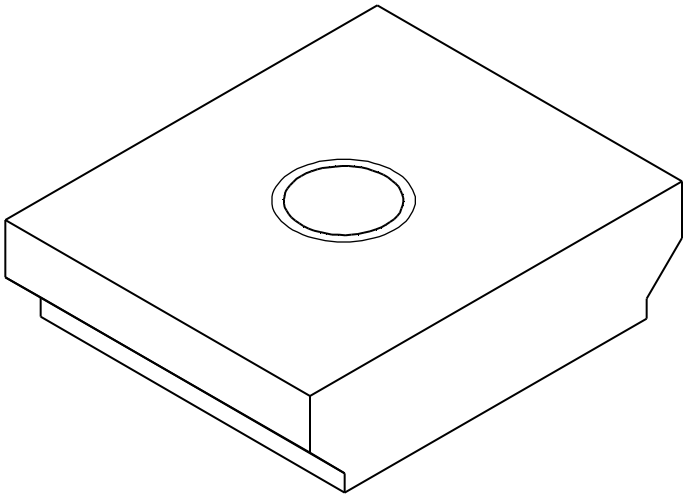

NOTES:

SURFACE FINISH : FAO @125RMS 125

COATING : GEOMET 321P/ FASTENAL ECOGUARD

MATERIAL : ASTM A36 1.13 X 1.38 X .38

UNLESS OTHERWISE SPECIFIED THE FOLLOWING TOLERANCES APPLY

PRECISION		TOLERANCE
.X	±	0.12
.XX	±	0.06
.XXX	±	0.03
ANGLES	±	2°

DRAWING TITLE:

STEEL LUG 1.38 X 1.13

DRAWN BY:	APRVD BY:	APRVD DATE:
MP	JW	8/12/16

SIZE	SHEET:	SCALE:
A	1 of 1	2:1

REFERENCE DRAWING: 32296730

MATERIAL:	WEIGHT: (lbs)	PART NUMBER:	ECO NO.
SEE MATERIAL NOTE	0.03	**12180667**	22544